LONG J HOUSING (LJ)

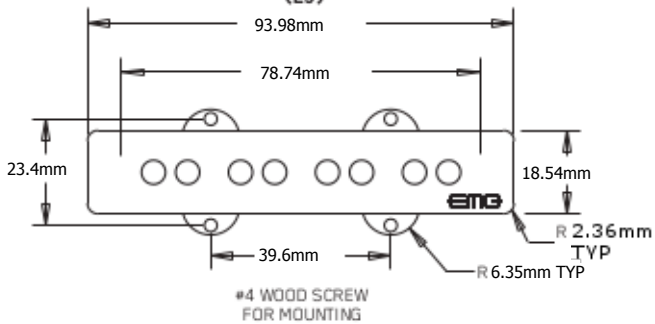

SHORT J HOUSING (SJ)