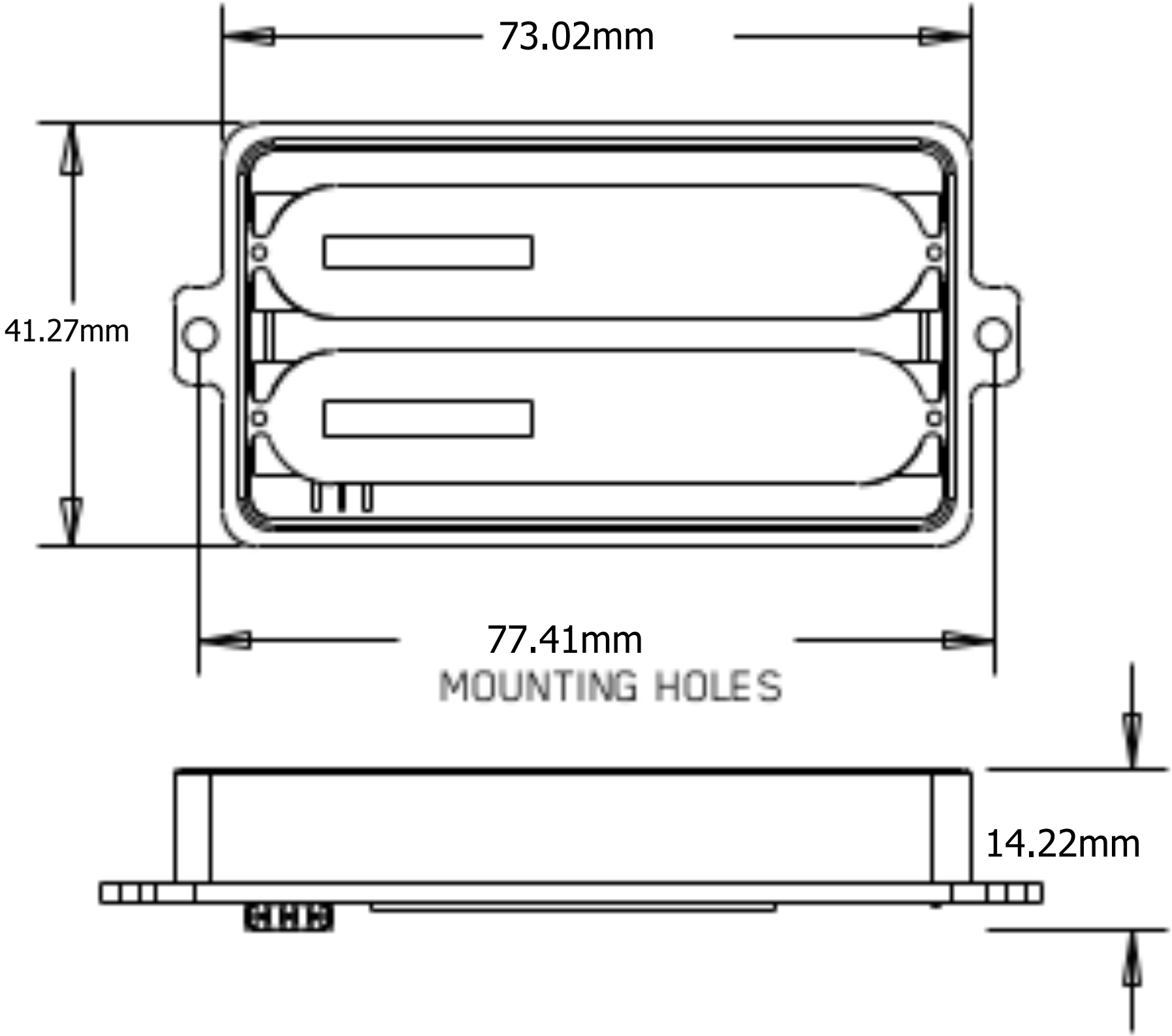
73.02mm
41.27mm
77.41mm
MOUNTING HOLES
14.22mm