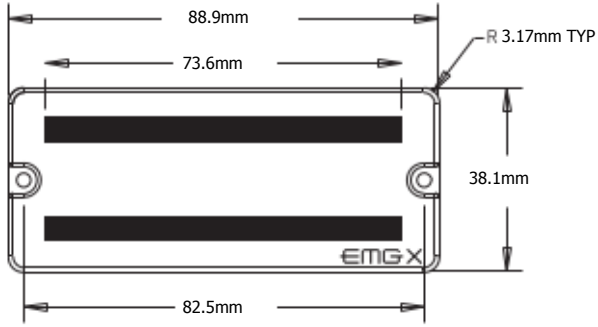

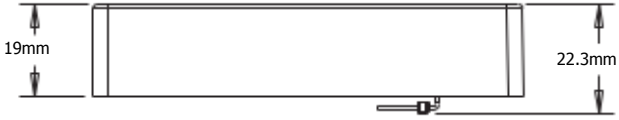

1 VOLUME CONTROL (25K)
1 ACTIVE VLPF TONE CONTROL

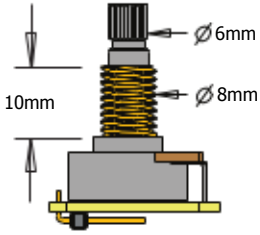

ADJUSTMENT SCREWS

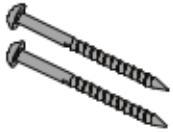

PICKUP CABLE 15" (38cm)

2 CONNECT CABLES 5.5" (14cm)

OUTPUT CABLE 6" (15cm)

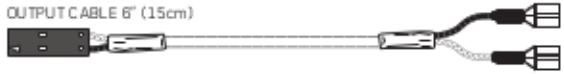

SUPPLY CABLE 5.5" (14cm)

BATTERY CABLE 7" (18cm)

BATTERY BUSS

STEREO OUTPUT JACK

2 PICKUP IN/ OUT BATTERY BUSS