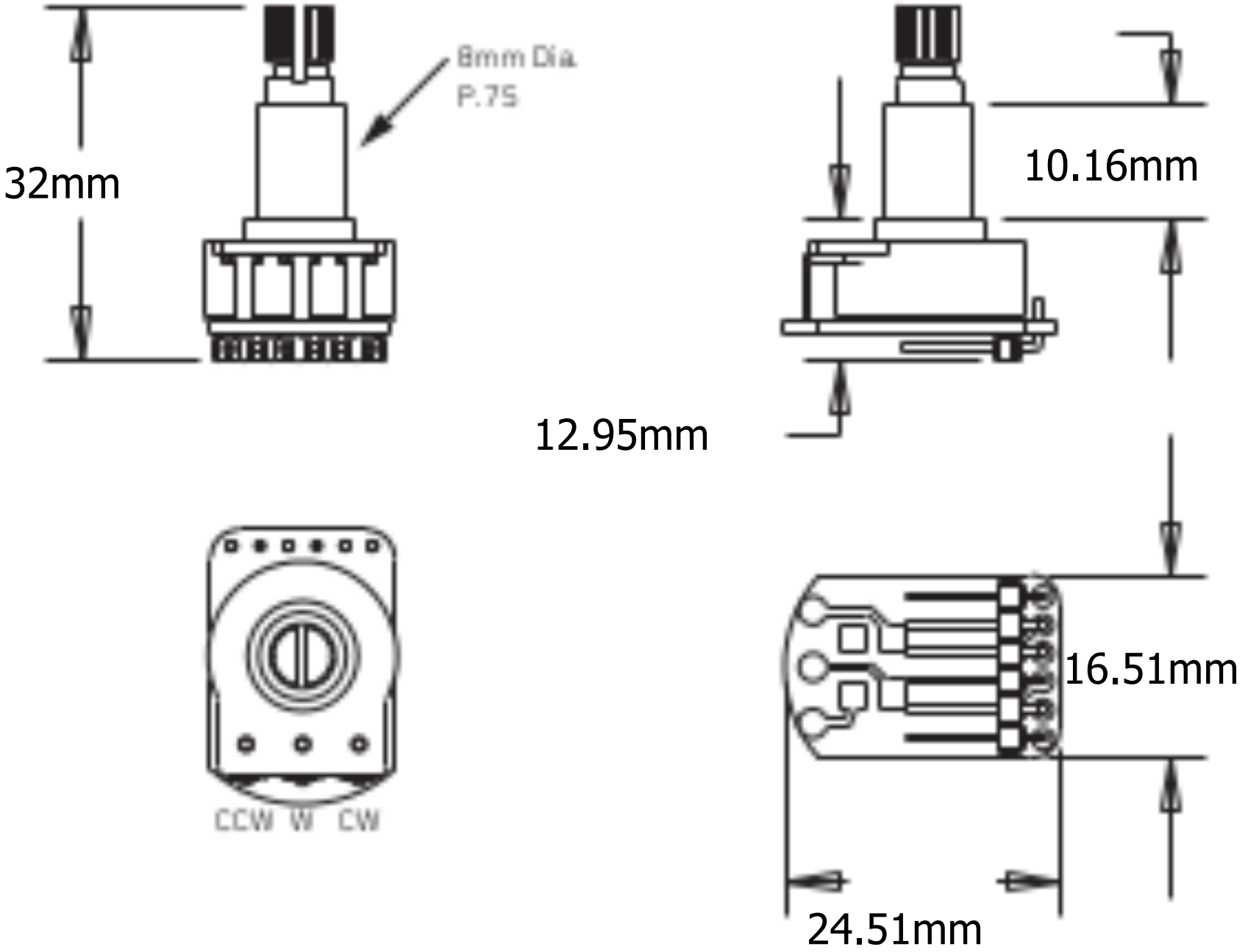
8mm Dia.
P.7S
32mm
10.16mm
12.95mm
16.51mm
24.51mm
CCW W CW